Component Location

Index

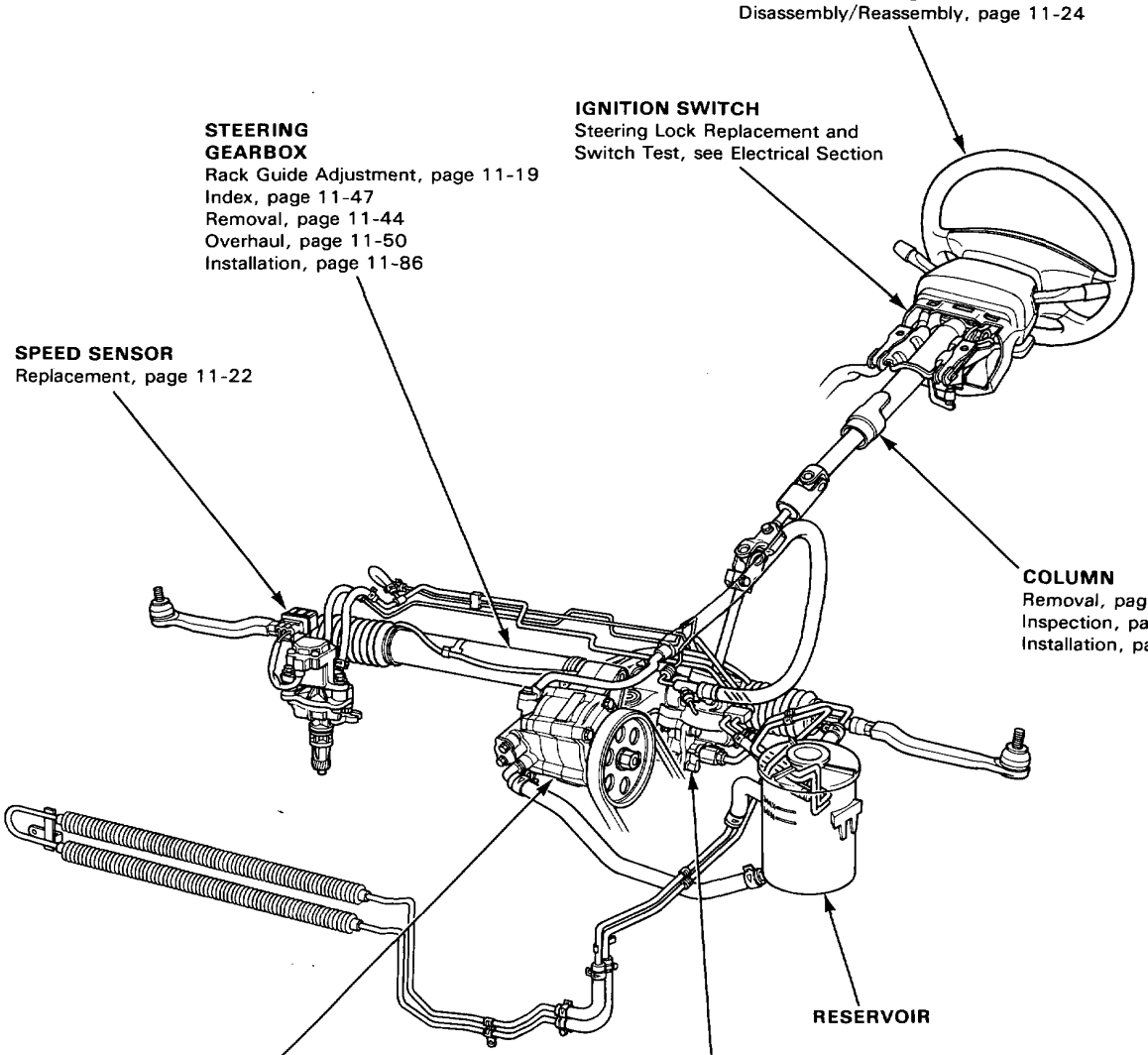

STEERING WHEEL
Steering wheel positioning,
see Suspension/Alignment
Disassembly/Reassembly, page 11-24

IGNITION SWITCH
Steering Lock Replacement and
Switch Test, see Electrical Section

STEERING GEARBOX
Rack Guide Adjustment, page 11-19
Index, page 11-47
Removal, page 11-44
Overhaul, page 11-50
Installation, page 11-86

SPEED SENSOR
Replacement, page 11-22

COLUMN
Removal, page 11-25
Inspection, page 11-27
Installation, page 11-28

RESERVOIR

VALVE BODY UNIT
Removal, page 11-38
Overhaul, page 11-42
Installation, page 11-43

PUMP
Pump Belt Adjustment, page 11-18
Fluid Replacement, page 11-19
Pump Pressure Check, page 11-20
Inspection, page 11-31
Pump Replacement, page 11-31
Control Valve Inspection and Replacement, page 11-32
Housing Disassembly, page 11-35
Housing Reassembly, page 11-36